# Concept Wall Mounted WC Pan

## ILLUSTRATED

| | |
|---|---|
| **E7850** | Concept wall mounted WC pan with horizontal outlet |
| **S3643** | Conceala 2 4.5/3 or 4/2.6 litre cistern, dual flush valve, side supply, internal overflow, alternative height plastic flushbends, no flushplate/button |
| **E7917** | Concept toilet seat and cover, slow close |
| **E4437** | Contemporary flush plate, dual flush for Conceala 2 cisterns |
| **S4300** | Panekta outlet connector to convert horizontal outlet wcs to S or turned P trap |
| **E0060** | Support frame with bolts for wall mounted toilet bowls |

## OPTIONS

| | |
|---|---|
| **E2125** | Conceala 2 concealed cistern universal height, side inlet cistern - pneumatic dual flush valve - no flushplate - 6/4 litre flush |
| **E7918** | Concept toilet seat and cover |
| **E7726** | Concept toilet seat and cover, slim with quick release, slow close |
| **E7725** | Concept toilet seat and cover, slim |

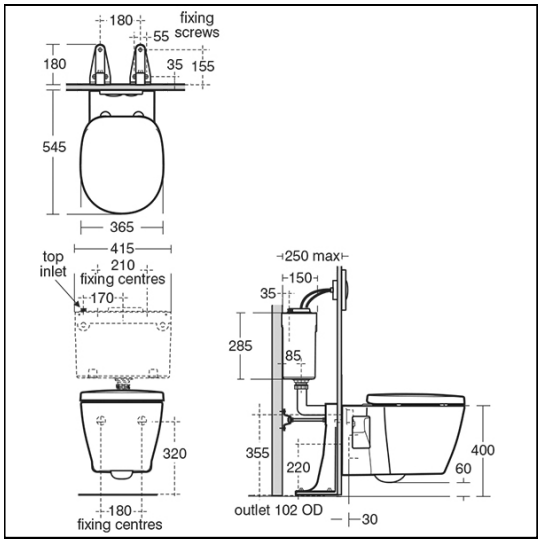


## ILLUSTRATED PRODUCT DETAILS

### Weights

| | |
|---|---|
| **E7850** | 24.60 KG |
| **S3643** | 2.70 KG |
| **E7917** | 2.30 KG |
| **E4437** | 0.46 KG |
| **S4300** | 0.39 KG |
| **E0060** | 4.28 KG |

### Materials

| | |
|---|---|
| **E7850** | Vitreous China |
| **S3643** | Plastic |
| **E7917** | Plastic |
| **E4437** | Chrome Plated Plastic |
| **S4300** | Plastic |
| **E0060** | Metal |

### Finishes

| | |
|---|---|
| **E7850** | White (01) |
| **S3643** | Neutral / No Finish (67) |
| **E7917** | White (01) |
| **E4437** | Chrome (AA) |
| **S4300** | White (01) |
| **E0060** | Neutral / No Finish (67) |

### Capacity

**S3643** 4.0 litres

### Designer

Robin Levien, RDI

### Standards

Vitreous china to BS 3402, BS EN 997 & BS EN 33

### Special Notes

E0060 support brackets secured to floor within the duct, WC fixed to support brackets with bolts supplied and bolts screwed to back wall with brackets. Joint sealed with waterproof sealant (not supplied). Can be used with furniture WC units, support brackets E0060 required.

## ACCREDITATIONS

**E2125(67)**

Unified Water Label — 6.0 Litres

**S3643(67)**

Unified Water Label — 3.0 Average Flushing Volume (Litres)

## FEATURES



Ideal Standard (UK) Ltd. makes every effort to ensure that the information provided on its website is accurate. However, we cannot guarantee this, and accept no liability for any information or advice given via its website.

Ideal Standard